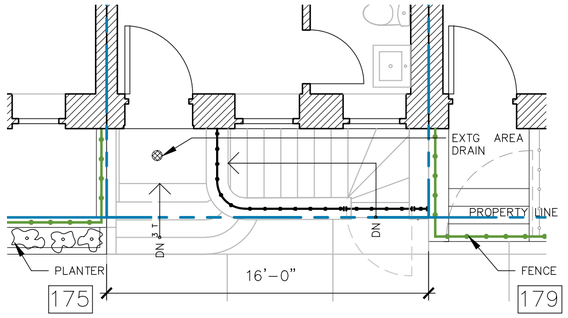


PLAN

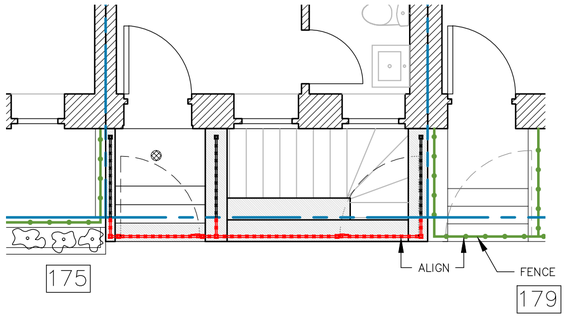


PLAN

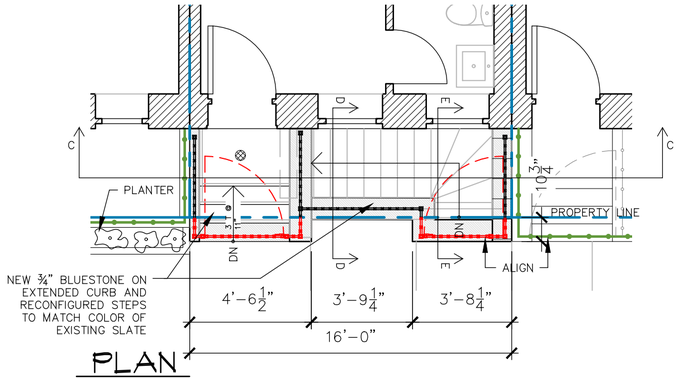


PLAN

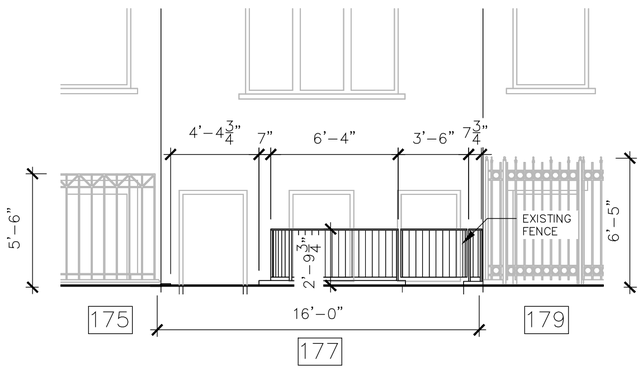


ELEVATION

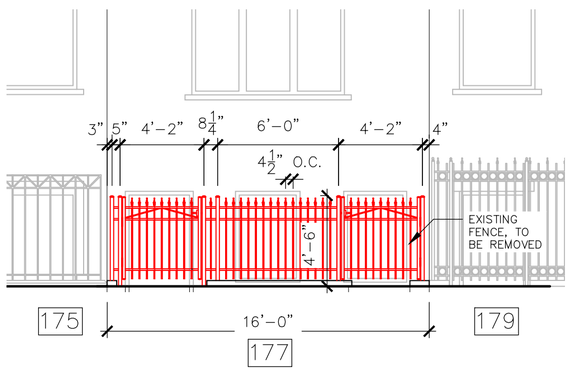


ELEVATION

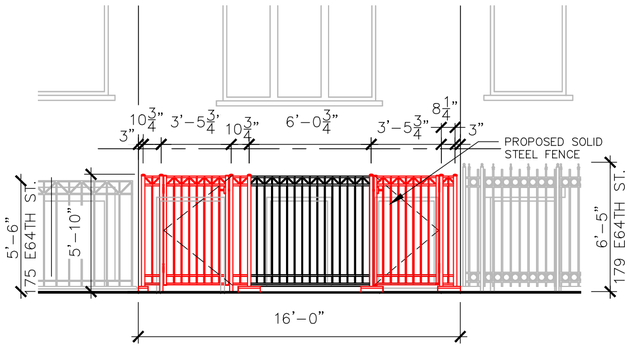


ELEVATION

## EXISTING CONDITIONS

## EXISTING REVOCABLE CONSENT GRANTED 8/2/2017

## PROPOSED MODIFICATION TO EXISTING REVOCABLE CONSENT



LOOKING AT 175

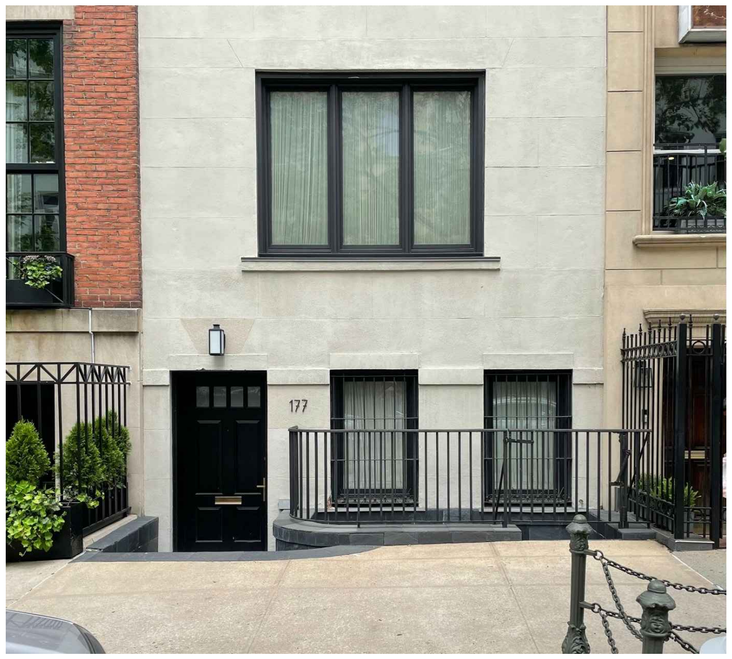


177 FRONT



LOOKING AT 179

SEALS/ SIGNATURE:

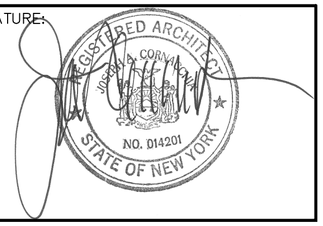


CAP
CORNACCHIA ARCHITECTS & PLANNERS, P.C.
34 East 23rd Street New York New York 10010 212-420-1120

CB8M PRESENTATION DRAWING
MODIFICATION TO
REVOCABLE CONSENT

CB-001.00

1 OF 1